Vatronics Technologies Limited

NSP POWER TYPE NTC THERMISTORS

* Introduction:

••Vatronics is Suitable for the use in switching power supply, UPS power supply, electric heaters, electronic energy-saving lighting, electronic ballast and electronic devices for power supply circuit protection; and for the use in color video tube, incandescent bulb and other lighting devices for filament protection; it features small size, high power, strong resistance to surge current, quick response, high B value, low residue resistance, long service life, high reliability, high security and wide applications.

* Applications:

••Suitable for the use in switching power supply, UPS power supply, electric heaters, electronic energy-saving lighting, electronic ballast and electronic devices for power supply circuit protection; and for the use in color video tube, incandescent bulb and other lighting devices for filament protection.

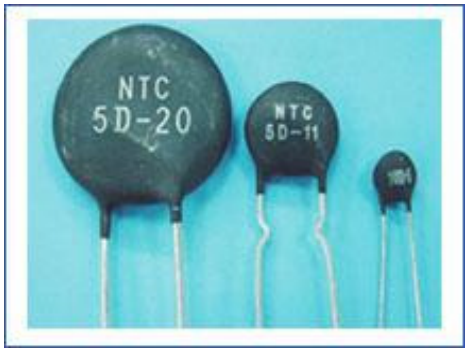

* Features:

••① Small size, high power and strong resistance to surge current;

••② Quick response;

••③ High in B value and low in residual resistance;

••④ Long service life and high reliability;

••⑤ High security and wide applications.

Vatronics Part Number System

NTC	5D	13
(1)	(2)	(3)

(1)Product Type: NTC

(3)Diameter =13mm

(2)Risistor Value at 25C =5C

Code (Chip Diameter)	A Chip Diameter MAX	B Lead Wire Length MIN	C Pitch	D Chip Thickness MAX	E① Lead Wire Diameter	F Distance from Lead Wire to Chip MAX	G② Molding Distance	H② Post-Molding Pitch MIN
20	22	25	7.5±1/10±1	7	1.0	4	28±3.5	4.5
15	16.5	25	7.5±1/10±1	6	1.0	4	24±3.5	4.5
13	14.5	25	7.5±1	6	0.8	4	22±3.0	4.5
11	12.5	25	5±1	5	0.8	4	20±2.0	3.0
9	10.5	25	5±1	5	0.6	4	18±2.0	3.0

Note:

① "E" value may be 0.6 for resistors for which the chip's diameter is ≤ϕ13and the working current is ≤2A.

② "G" column and "H" column stand for bend dimensions of the lead.

Specifications List

Model Number	R_{25}±20% (Ω)	Max. Current (A)	Approx. Resistance in Max. Current at 25• (Ω)	Dissipation Power (mW/•)	Time Constant •S•	Operating Temperature •••
NTC3D-9	3	4	0.12	11	35	
NTC4D-9	4	3	0.19	11	35	
NTC5D-9	5	3	0.21	11	34	
NTC6D-9	6	2	0.315	11	34	
NTC8D-9	8	2	0.4	11	32	
NTC10D-9	10	2	0.458	11	32	
NTC12D-9	12	1	0.652	11	32	
NTC16D-9	16	1	0.802	11	31	
NTC20D-9	20	1	0.864	11	30	
NTC30D-9	30	1	1.022	11	30	
NTC50D-9	50	1	1.252	11	30	
NTC80D-9	80	0.8	2.01	11	30	
NTC2R5D-11	2.5	5	0.095	13	43	

NTC3D-11	3	5	0.1	13	43	
NTC4D-11	4	4	0.15	13	44	
NTC5D-11	5	4	0.156	13	45	
NTC6D-11	6	3	0.24	13	45	
NTC8D-11	8	3	0.255	13.5	47	
NTC10D-11	10	3	0.275	14	47	
NTC12D-11	12	2	0.426	14	48	
NTC16D-11	16	2	0.47	14	50	
NTC20D-11	20	2	0.512	15	52	
NTC30D-11	30	1.5	0.667	15	52	
NTC50D-11	50	1.5	1.021	15	51	
NTC80D-11	80	1.2	1.656	15	51	
NTC1R3D-13	1.3	7	0.062	13	60	
NTC1R5D-13	1.5	7	0.073	13	60	
NTC2R5D-13	2.5	6	0.088	13	60	
NTC3D-13	3	6	0.092	14	60	
NTC4D-13	4	5	0.12	15	67	
NTC5D-13	5	5	0.125	15	68	
NTC6D-13	6	4	0.17	15	65	-55~+200
NTC7D-13	7	4	0.188	15	65	
NTC8D-13	8	4	0.194	15	60	
NTC10D-13	10	4	0.206	15	65	
NTC12D-13	12	3	0.316	16	65	
NTC15D-13	15	3	0.335	16	60	
NTC16D-13	16	3	0.338	16	60	
NTC20D-13	20	3	0.372	16	65	
NTC30D-13	30	2.5	0.517	16	65	
NTC1R3D-15	1.3	8	0.048	18	68	
NTC1R5D-15	1.5	8	0.052	19	69	

NTC2R5D-15	2.5	7	0.07	19	79
NTC3D-15	3	7	0.075	18	76
NTC4D-15	4	6	0.097	20	76
NTC5D-15	5	6	0.112	20	76
NTC6D-15	6	5	0.155	20	80
NTC7D-15	7	5	0.173	20	80
NTC8D-15	8	5	0.178	20	80
NTC10D-15	10	5	0.18	20	75
NTC12D-15	12	4	0.25	20	75
NTC15D-15	15	4	0.268	21	85
NTC16D-15	16	4	0.276	21	70
NTC20D-15	20	4	0.288	17	86
NTC30D-15	30	3.5	0.438	18	75
NTC0R7D-20	0.7	12	0.018	25	89
NTC1R3D-20	1.3	9	0.037	24	88
NTC3D-20	3	8	0.055	24	88
NTC5D-20	5	7	0.087	23	87
NTC6D-20	6	6	0.113	25	103
NTC8D-20	8	6	0.142	25	105
NTC10D-20	10	6	0.162	24	102
NTC12D-20	12	5	0.195	24	100
NTC16D-20	16	5	0.212	25	100

Note: Vatronics Power type NTC thermistor comes with optional chip diameter of ϕ 7, 8, 9, 10, 11, 13, 15, 18, 20, 22, 25, 30, 35, etc. For required specifications not shown, please do not hesitate to contact us.

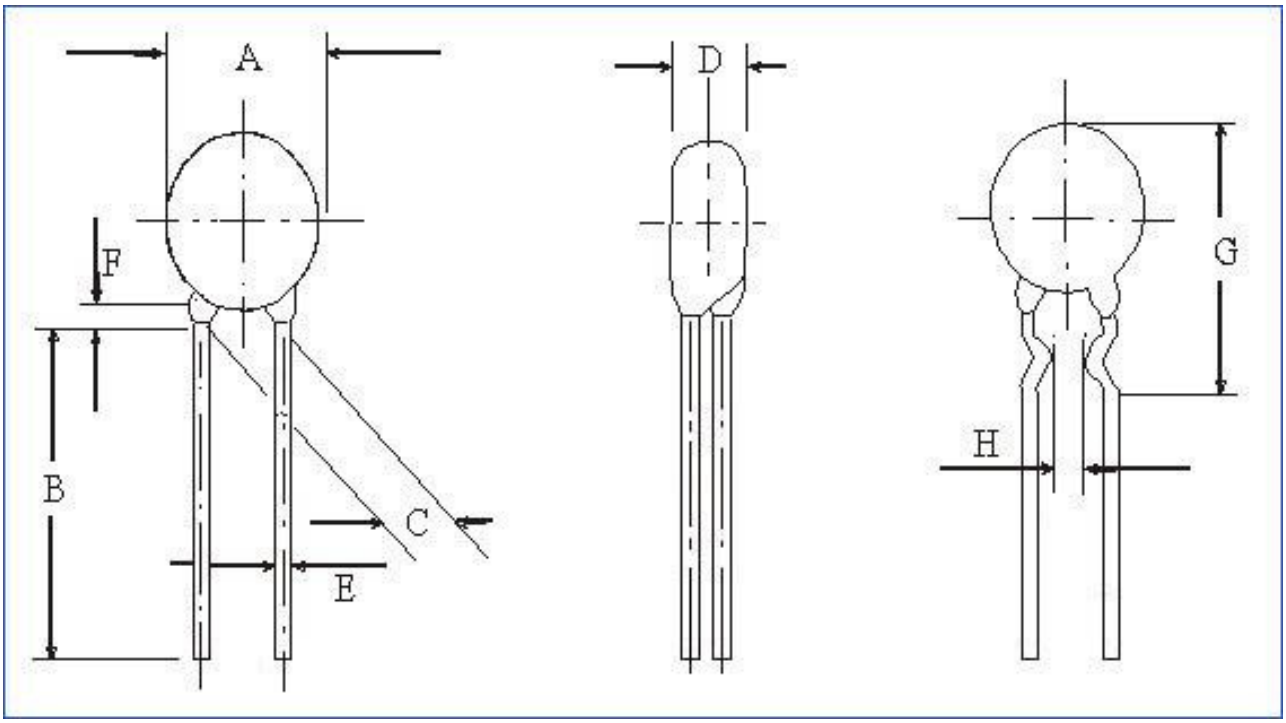

A--chip diameter, B--lead wire length, C--pitch, D--chip thickness, E--lead wire diameter,

F--distance from lead wire to chip, G--molding distance, H--post-molding pitch